Modelnummer DHP484 CORDLESS HAMMER DRIVER DRILL

Artikel	Reservedelsnı	Beskrivelse	I/C	Qty	N/O	Opt. 1	Opt. 2	Note
001	183E71-3	HOUSING SET		1				
C10	263005-3	RUBBER PIN 6		2				
C20	252126-6	HEX. LOCKING NUT M4-7		2				
D10		INC. 21						
002	852L96-7	DHP484 NAME PLATE		1				
003	266429-2	TAPPING SCREW 3X16		7				
004	419041-9	F/R CHANGE LEVER		1				
005	650710-5	SWITCH C3JW-4B		1				
006	619406-7	ROTOR		1				
007	629225-3	STATOR		1				
008	620549-0	LED CIRCUIT		1				
009	643874-2	TERMINAL		1				
010	123738-1	SPEED CHANGE LEVER ASSEMBLY		1				
C10	233438-6	COMPRESSION SPRING 4		2				
011	251497-8	TAPPING SCREW 3X20		4				
012	251468-5	- FLAT HEAD SCREW M6X22		1				
013	766027-7	KEYLESS DRILL CHUCK 13		1				
014	123736-5	GEAR ASSEMBLY		1	*			
014-1	123953-7	GEAR ASSEMBLY	<	1				
015	266490-9	TAPPING SCREW PT 2X6		3				
016	620548-2	CONTROLLER		1				
017	652069-6	FLAT HEAD SCREW M3X6		3				
018	424517-3	CUSHION		1				
019	456967-4	REAR COVER		1				
021	183E71-3	HOUSING SET		1				
C10	263005-3	RUBBER PIN 6		2				
C20	252126-6	HEX. LOCKING NUT M4-7		2				
D10		INC. 1						
022	266429-2	TAPPING SCREW 3X16		2				
A01	251314-2	+ SCREW M4X12		1				
A02A	346317-0	HOOK		1				
A02B	346317-0	HOOK		1				
A02C	346317-0	HOOK		1				
A02D	346317-0	HOOK		1				
A02E	346449-3	HOOK		1				
A03	784637-8	+- BIT 2-45		1				
A04B	821550-0	CONNECTOR PLASTIC CASE (TYPE2)		1				
C10	453974-8	LATCH		4				
A04C	821550-0	CONNECTOR PLASTIC CASE (TYPE2)		1				
C10	453974-8	LATCH		4				
A04D	821550-0	CONNECTOR PLASTIC CASE (TYPE2)		1				
C10	453974-8	LATCH		4				
A04E	821550-0	CONNECTOR PLASTIC CASE (TYPE2)		1				
C10	453974-8	LATCH		4				
A05B	450128-8	BATTERY COVER		1				
A05C	450128-8	BATTERY COVER		1				
A05D	450128-8	BATTERY COVER		1				
A06B	***DC18RC	DC18RC FAST CHARGER		1				

Please order the parts with a part number.

Print Date 13/09/2016

Modelnummer DHP484 CORDLESS HAMMER DRIVER DRILL

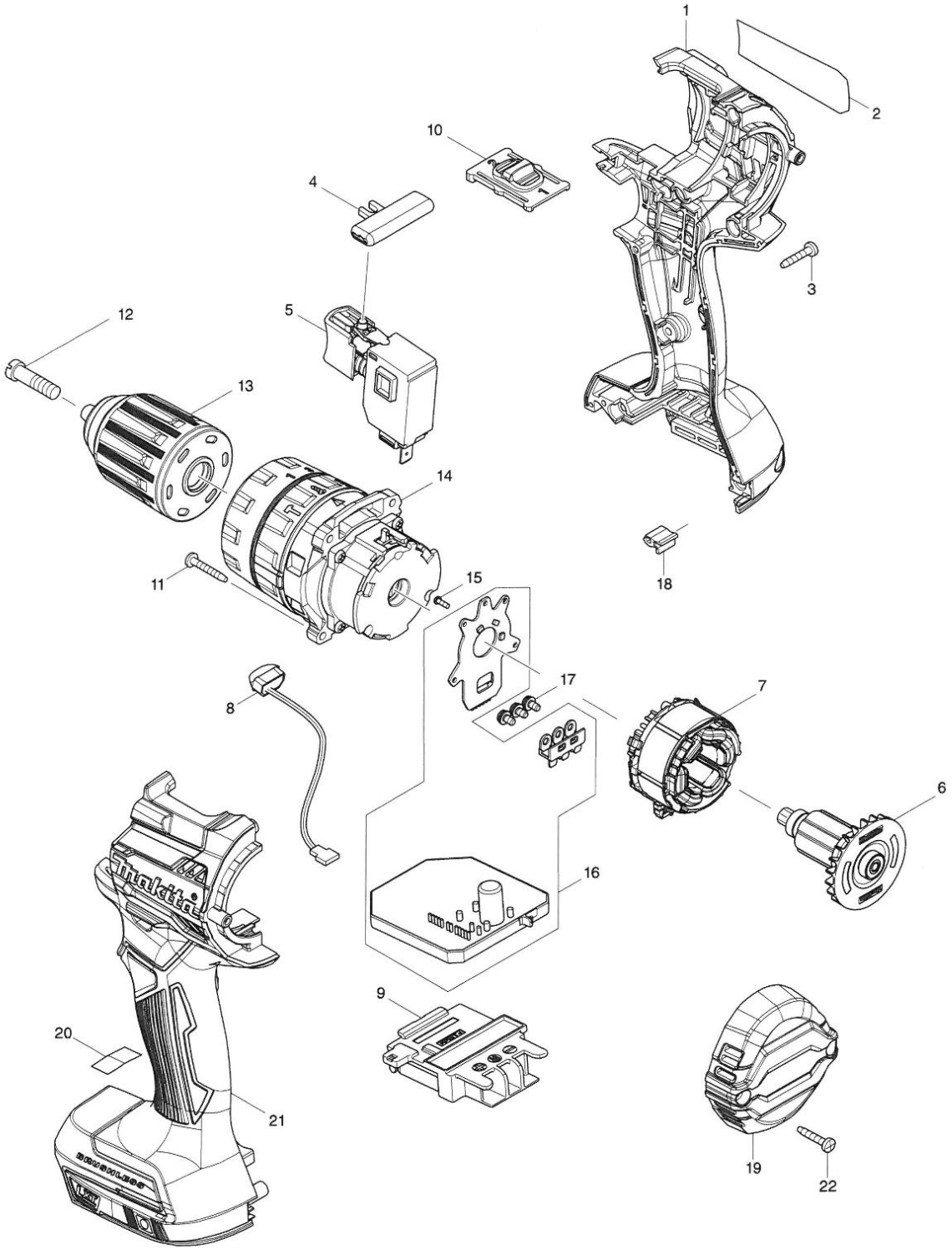

Page 1 / 1

Modelnummer DHP484 CORDLESS HAMMER DRIVER DRILL

Artikel	Reservedelsnr	Beskrivelse	I/C	Qty	N/O	Opt. 1	Opt. 2	Note
D10		COMPO-PARTS						
A06C	***DC18RC	DC18RC FAST CHARGER		1				
D10		COMPO-PARTS						
A06D	***DC18RC	DC18RC FAST CHARGER		1				
D10		COMPO-PARTS						
A07B	197600-6	BATTERY BL1830B SET		2				
A07C	197265-4	BATTERY BL1840B SET		2				
A07D	197280-8	BATTERY BL1850B SET		2				
A07E	196235-0	BATTERY BL1815N SET		1				
A08B	837916-4	INNER TRAY		1				
A08C	837916-4	INNER TRAY		1				
A08D	837916-4	INNER TRAY		1				
A08E	837916-4	INNER TRAY		1				
A09B	810B34-5	DHP484RFJ INDICATION LABEL		1				
A09C	810B39-5	DHP484RMJ INDICATION LABEL		1				
A09D	810B44-2	DHP484RTJ INDICATION LABEL		1				
A09E	810B32-9	DHP484Y1J INDICATION LABEL		1				
A10B	810B35-3	DHP484RFJ PLASTIC CASE LABEL		2				
A10C	810B40-0	DHP484RMJ PLASTIC CASE LABEL		2				
A10D	810B45-0	DHP484RTJ PLASTIC CASE LABEL		2				
A10E	810B33-7	DHP484Y1J PLASTIC CASE LABEL		2				

Please order the parts with a part number.

Print Date 13/09/2016